OFFSET CONE WEAVE

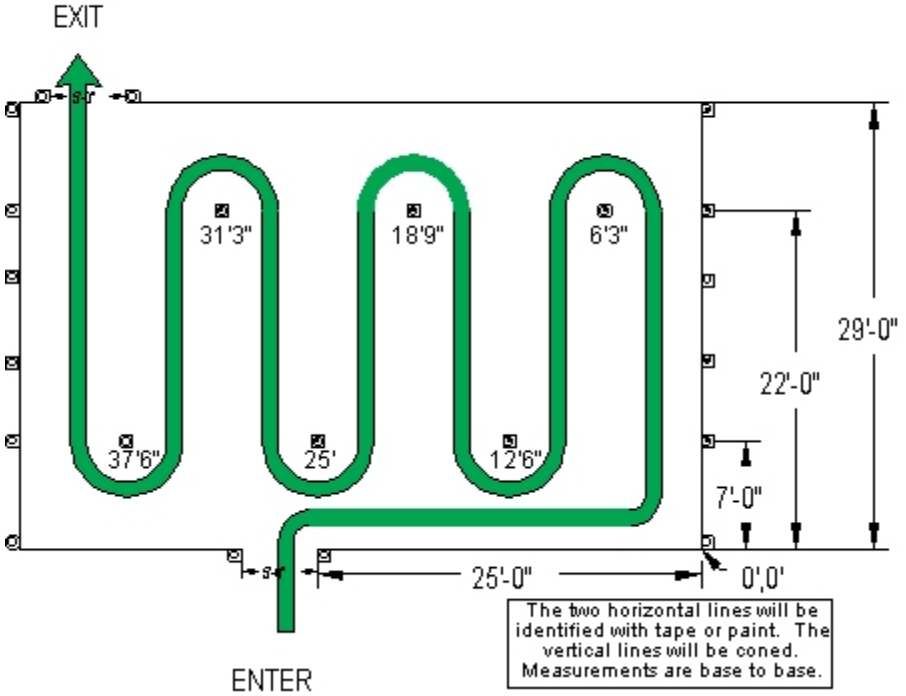

Printed from Motorcops.com